Work Order ID 72469

Tuesday, July 26, 2011 9:08:07 AM

Item ID: D4131-3 **Accept** **Setup Start**

Revision ID: **Stop**

Item Name: Base

Start Date: 7/26/2011 **Start Qty:** 10.00 **Cust Item ID:**

Required Date: 7/29/2011 **Req'd Qty:** 10.00 **Customer:**

Reference:

Approvals: **Process Plan:** N **Date:** 11-07-26 **Tooling:** _____ **Date:** _____ **Run Start**

QC: _____ **Date:** _____ **SPC (Y/N):** _____ **Date:** _____ **Stop**

Sequence ID/ Work Center ID	Operation Description	Set Up/ Run Hours	Tool ID	Tool #	Plan Code	Accept Qty	Reject Qty	Reject Number	Insp. Stamp
Draw Nbr	**Revision Nbr**								
D4131	A U/R see attached email								
100		0.00							
Waterjet	**Memo**	0.00				B11-8-9			
FLOW CNC Waterjet 304 . 05C	1-Cut as per Dwg Dwg Rev: UR Prog Rev: UR 2-Deburr if necessary								12
110	QC2- Inspect parts off machine FAI/FAIB	0.00							
QC	**Memo**	0.00				B11-8-9			
Quality Control									

Dart Aerospace Ltd

W/O:		WORK ORDER CHANGES					
DATE	STEP	PROCEDURE CHANGE	By	Date	Qty	Approval Chief Eng / Prod Mgr	Approval QC Inspector

Part No: _____ **PAR #:** _____ **Fault Category:** _____ **NCR:** Yes No **DQA:** _____ **Date:** _____

Resolution: _____ **Disposition:** _____ **QA: N/C Closed:** _____ **Date:** _____

NCR:		WORK ORDER NON-CONFORMANCE (NCR)						
DATE	STEP	Description of NC Section A	Corrective Action Section B			Verification Section C	Approval Chief Eng	Approval QC Inspector
			Initial Chief Eng	Action Description Chief Eng	Sign & Date			

NOTE: Date & initial all entries

H:\fFORMS\Quality Assurance\approved QA\NCRWO RevE

Work Order ID 72469

Tuesday, July 26, 2011 9:08:07 AM

Item ID: D4131-3 **Accept** **Setup Start** **Stop**

Revision ID:

Item Name: Base

Start Date: 7/26/2011 **Start Qty:** 10.00 **Cust Item ID:**

Required Date: 7/29/2011 **Req'd Qty:** 10.00 **Customer:**

Reference:

Approvals: **Process Plan:** _____ **Date:** _____ **Tooling:** _____ **Date:** _____ **Run Start** **Stop**

QC: _____ **Date:** _____ **SPC (Y/N):** _____ **Date:** _____

Sequence ID/ Work Center ID	Operation Description	Set Up/ Run Hours	Tool ID	Tool #	Plan Code	Accept Qty	Reject Qty	Reject Number	Insp. Stamp
120 QC Quality Control	QC8- Inspect parts - second check **Memo**	0.00 0.00 δ 11/08/10				412			
130 Brake NC Brake NC	Bend as per dwg **Memo**	0.00 0.00 SB 11/08/25				12			
140 QC Quality Control	QC5- Inspect part completeness to step on W/O **Memo**	0.00 0.00 δ 11/08/25				412			

Dart Aerospace Ltd

W/O:		WORK ORDER CHANGES					
DATE	STEP	PROCEDURE CHANGE	By	Date	Qty	Approval Chief Eng / Prod Mgr	Approval QC Inspector

Part No: _____ **PAR #:** _____ **Fault Category:** _____ **NCR:** Yes No **DQA:** _____ **Date:** _____

Resolution: _____ **Disposition:** _____ **QA: N/C Closed:** _____ **Date:** _____

NCR:		WORK ORDER NON-CONFORMANCE (NCR)						
DATE	STEP	Description of NC Section A	Corrective Action Section B			Verification Section C	Approval Chief Eng	Approval QC Inspector
			Initial Chief Eng	Action Description Chief Eng	Sign & Date			

NOTE: Date & initial all entries

Work Order ID 72469

Tuesday, July 26, 2011 9:08:07 AM

Item ID: D4131-3 **Accept** **Setup Start**

Revision ID:

Item Name: Base **Stop**

Start Date: 7/26/2011 **Start Qty:** 10.00 **Cust Item ID:**

Required Date: 7/29/2011 **Req'd Qty:** 10.00 **Customer:**

Reference:

Approvals: **Process Plan:** _____ **Date:** _____ **Tooling:** _____ **Date:** _____ **Run Start**

QC: _____ **Date:** _____ **SPC (Y/N):** _____ **Date:** _____ **Stop**

Sequence ID/ Work Center ID	Operation Description	Set Up/ Run Hours	Tool ID	Tool #	Plan Code	Accept Qty	Reject Qty	Reject Number	Insp. Stamp
150	Identify as per dwg & Stock Location ~~[illegible]~~ ~~[illegible]~~ Stores.	0.00							
Packaging	**Memo** ST131	0.00				12	11-8-25		(X12)
Packaging									
160	QC21- Final Inspection - Work Order Release	0.00							
QC	**Memo**	0.00					11/8/26		
Quality Control									

CL11081 26

Dart Aerospace Ltd

W/O:		WORK ORDER CHANGES					
DATE	STEP	PROCEDURE CHANGE	By	Date	Qty	Approval Chief Eng / Prod Mgr	Approval QC Inspector

Part No: _____ **PAR #:** _____ **Fault Category:** _____ **NCR:** Yes No **DQA:** _____ **Date:** _____

Resolution: _____ **Disposition:** _____ **QA: N/C Closed:** _____ **Date:** _____

NCR:		WORK ORDER NON-CONFORMANCE (NCR)						
DATE	STEP	Description of NC Section A	Corrective Action Section B			Verification Section C	Approval Chief Eng	Approval QC Inspector
			Initial Chief Eng	Action Description Chief Eng	Sign & Date			

NOTE: Date & initial all entries

Picklist Print

Tuesday, July 26, 2011 9:08:12 AM

Work Order ID: 72469

Parent Item: D4131-3

Parent Item Name: Base

Start Date: 7/26/2011 **Required Date:** 7/29/2011

Start Qty: 10.00 **Required Qty:** 10.00

Comments: IPP Rev:A 10.10.06 new issue DD verf:EC

Component Item ID/ Item Name	Replacement Item ID	Mfg/ Purch	Bin Item	Primary Location	Last Location	Route Seq ID	Unit of Measure	Qty on Hand	Qty per Kit	Total Qty	Qty Issued	Date Issued	Status
M304S18GA 304/316 .050 Sheet		Purchased	No			100	sf	237.6550	0.1614	1.698947	2 B11-8-9		

Location	Loc Qty	Loc Code
MAT020	85.655	
113062	13.655	
116135	3	
116979	69	116979
MAT021	152	
118217	152	

(12)

Dart Aerospace Ltd

W/O:		WORK ORDER CHANGES					
DATE	STEP	PROCEDURE CHANGE	By	Date	Qty	Approval Chief Eng / Prod Mgr	Approval QC Inspector

Part No: _____ **PAR #:** _____ **Fault Category:** _____ **NCR:** Yes No **DQA:** _____ **Date:** _____

Resolution: _____ **Disposition:** _____ **QA: N/C Closed:** _____ **Date:** _____

NCR:		WORK ORDER NON-CONFORMANCE (NCR)						
DATE	STEP	Description of NC Section A	Corrective Action Section B			Verification Section C	Approval Chief Eng	Approval QC Inspector
			Initial Chief Eng	Action Description Chief Eng	Sign & Date			

NOTE: Date & initial all entries

DART AEROSPACE LTD	Work Order:	72469
Description: Base	Part Number:	D4131-3
Inspection Dwg: D4131 Rev: A		Page 1 of 1

FIRST ARTICLE INSPECTION CHECKLIST

Drawing Dimension	Tolerance	Actual Dimension	Accept	Reject	Method of Inspection	Comments
Ø0.565	+0.008/-0.001	.5566	✓		V (BG)	
4.79	+/-0.030	BEND				
3.31	+/-0.030	BEND				
3.810	+/-0.010	3.804	✓		V	
4.18	+/-0.030	4.182	✓		V	
6.10	+/-0.030	6.108	✓		V	
1.22	+/-0.030	1.218	✓		V	
1.380	+/-0.010	1.381	✓		V	
0.050	+/-0.010	.047	✓		V	

Measured by:	BB	Audited by:	S	Preliminary Approval:	
Date:	11-8-9	Date:	11/03/10	Date:	

Rev	Date	Change	Revised by	Approved
A	10.10.25	New Issue	KJ	

Dart Aerospace Ltd

W/O:		WORK ORDER CHANGES					
DATE	STEP	PROCEDURE CHANGE	By	Date	Qty	Approval Chief Eng / Prod Mgr	Approval QC Inspector

Part No: _____ **PAR #:** _____ **Fault Category:** _____ **NCR:** Yes No **DQA:** _____ **Date:** _____

Resolution: _____ **Disposition:** _____ **QA: N/C Closed:** _____ **Date:** _____

NCR:		WORK ORDER NON-CONFORMANCE (NCR)						
DATE	STEP	Description of NC Section A	Corrective Action Section B			Verification Section C	Approval Chief Eng	Approval QC Inspector
			Initial Chief Eng	Action Description Chief Eng	Sign & Date			

NOTE: Date & initial all entries

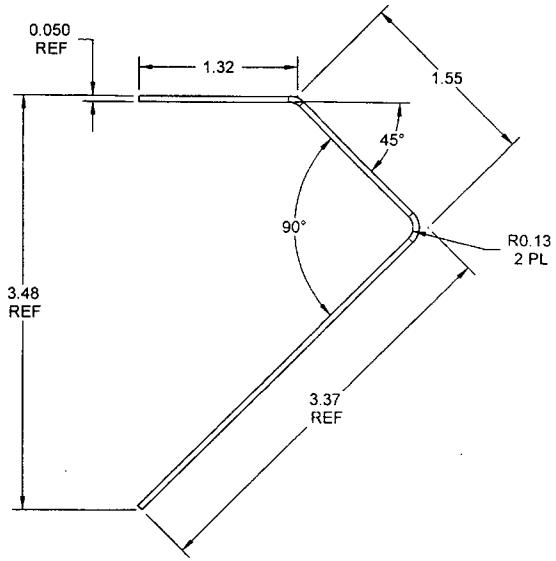

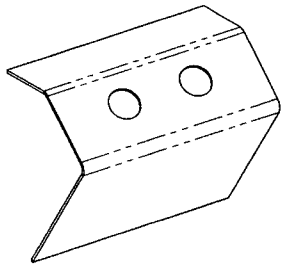

D4131-3 BASE
MAKE FROM D4131-3F FLAT PATTERN

SHOP COPY
RETURN TO
ENGINEERING
UNCONTROLLED COPY
SUBJECT TO AMENDMENT
WITHOUT NOTICE
WORK ORDER
NO. 72469

pl 11-07-26

UNDER REVIEW
11/07/10 VW

RELEASED
2010 -09- 23

NOTES:
1) MATERIAL: MAKE FROM D4131-3F FLAT PATTERN
2) FINISH: N/A
3) TOLERANCES: PER DART QSI 018 UNLESS OTHERWISE NOTED
4) UNITS: INCHES UNLESS OTHERWISE NOTED
5) BREAK SHARP EDGES: 0.005 TO 0.010 MAX
6) IDENTIFICATION: NONE
7) WEIGHT: 0.33 lbs

DESIGN	RF	**DART AEROSPACE USA, INC.** PORT HADLOCK, WA
DRAWN	RF	
CHECKED		DRAWING NO. D4131 — REV. A — SHEET 5 OF 8
MFG. APPR.		
APPROVED		TITLE: MANIFOLD ASSEMBLY — SCALE: NTS
DE APPR.		
DATE	10.09.16	

COPYRIGHT © 2010 BY DART AEROSPACE USA, INC.
THIS DOCUMENT IS PRIVATE AND CONFIDENTIAL AND IS SUPPLIED ON THE EXPRESS CONDITION THAT IT IS NOT TO BE USED FOR ANY PURPOSE OR COPIED OR COMMUNICATED TO ANY OTHER PERSON WITHOUT WRITTEN PERMISSION FROM DART AEROSPACE USA, INC.

Dart Aerospace Ltd

W/O:		WORK ORDER CHANGES					
DATE	STEP	PROCEDURE CHANGE	By	Date	Qty	Approval Chief Eng / Prod Mgr	Approval QC Inspector

Part No: _____ **PAR #:** _____ **Fault Category:** _____ **NCR:** Yes No **DQA:** _____ **Date:** _____

Resolution: _____ **Disposition:** _____ **QA: N/C Closed:** _____ **Date:** _____

NCR:		WORK ORDER NON-CONFORMANCE (NCR)						
DATE	STEP	Description of NC Section A	Corrective Action Section B			Verification Section C	Approval Chief Eng	Approval QC Inspector
			Initial Chief Eng	Action Description Chief Eng	Sign & Date			

NOTE: Date & initial all entries

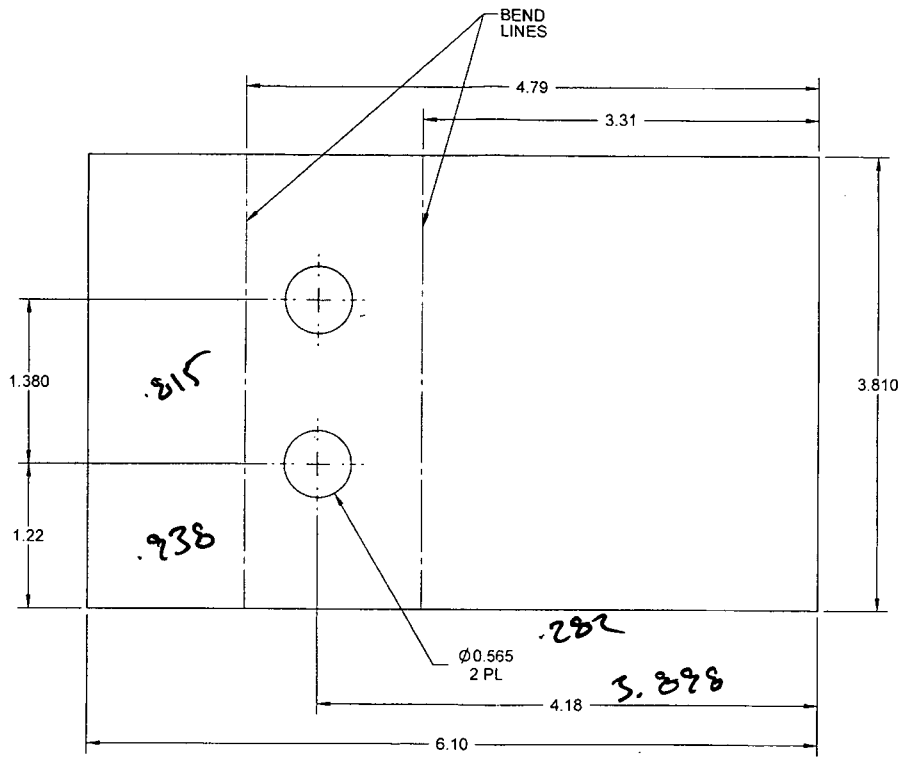

D4131-3F FLAT PATTERN

UNDER REVIEW
11/07/20

RELEASED
2010 -09- 23

NOTES:
1) MATERIAL: AISI 304/316 STAINLESS STEEL ANNEALED 2B FINISH 0.050 (18 GAUGE) SHEET
PER MIL-S-5059
OR AMS 5513 (304)
OR AMS 5524 (316)
OR ASTM A240
OR ASME SA240
PER DART SPEC. M304S18GA
2) FINISH: N/A
3) TOLERANCES: PER DART QSI 018 UNLESS OTHERWISE NOTED
4) UNITS: INCHES UNLESS OTHERWISE NOTED
5) BREAK SHARP EDGES: 0.005 TO 0.010 MAX
6) IDENTIFICATION: NONE
7) WEIGHT: 0.33 lbs

DESIGN	RF	DART AEROSPACE USA, INC. PORT HADLOCK, WA
DRAWN	RF	
CHECKED		DRAWING NO. D4131 — REV. A — SHEET 6 OF 8
MFG. APPR.		
APPROVED		TITLE: MANIFOLD ASSEMBLY — SCALE: NTS
DE APPR.		
DATE	10.09.16	

COPYRIGHT © 2010 BY DART AEROSPACE USA, INC.
THIS DOCUMENT IS PRIVATE AND CONFIDENTIAL AND IS SUPPLIED ON THE EXPRESS CONDITION THAT IT IS NOT TO BE USED FOR ANY PURPOSE OR COPIED OR COMMUNICATED TO ANY OTHER PERSON WITHOUT WRITTEN PERMISSION FROM DART AEROSPACE USA, INC.

Dart Aerospace Ltd

W/O:		WORK ORDER CHANGES					
DATE	STEP	PROCEDURE CHANGE	By	Date	Qty	Approval Chief Eng / Prod Mgr	Approval QC Inspector

Part No: _____ **PAR #:** _____ **Fault Category:** _____ **NCR:** Yes No **DQA:** _____ **Date:** _____

Resolution: _____ **Disposition:** _____ **QA: N/C Closed:** _____ **Date:** _____

NCR:		WORK ORDER NON-CONFORMANCE (NCR)						
DATE	STEP	Description of NC Section A	Corrective Action Section B			Verification Section C	Approval Chief Eng	Approval QC Inspector
			Initial Chief Eng	Action Description Chief Eng	Sign & Date			

NOTE: Date & initial all entries

Linda Lacelle

From: David Shepherd <dshepherd@dartaero.com>
Sent: July 22, 2011 1:00 PM
To: 'Linda Lacelle'; 'Roberto Fuentes'
Cc: Mike Petsche; 'Kim Johnston'
Subject: RE: Under Review - D4092, D4093, D4153, D4074 and D4131

Linda,

As discussed:

a) D4092/D4093 should not be manufactured as is
b) There are changes coming on D4153 and D4131, but it is acceptable to manufacture and release parts that are made per per D4153 Rev A and D4131 Rev A
c) All D4074-X parts must be manufactured per D4074 Rev B ... There is no change to D4074-1/-5 but changes are required to D4074-3/-7. D4074 Rev B should arrive in Hawkesbury today.

Hope this clarifies the situation ... Sorry for any confusion.

David

From: Linda Lacelle [mailto:llacelle@dartaero.com]
Sent: July-22-11 7:16 AM
To: 'Roberto Fuentes'
Cc: dshepherd@dartaero.com
Subject: RE: Under Review - D4092, D4093, D4153, D4074 and D4131

We have kits to ship next week, and more the week after, when is 4074, 4153 and 4131 all going to be released??

From: Roberto Fuentes [mailto:rfuentes@dartaero.com]
Sent: July 20, 2011 11:45 AM
To: Linda Lacelle
Cc: 'Stocker, Alan'; 'Beckett, Bill'; 'Golden, Brigitte'; 'Lavoie, Chantal'; 'Provencal, Chris'; 'Campbell, Daniel'; 'Duval, David'; 'Shepherd, David'; 'Charbonneau, Eric'; 'Downing, Eric'; 'Siemens, Harvey'; 'Jean-Francois Sauve'; 'Menard, Jean-Luc'; 'Johnston, Kim'; 'Fauteux, Melanie'; 'Petsche, Mike'; 'Willems, Sian'; 'Bedford, Sue'; 'Sheldon, Susanne'; 'Kerr, Cathy'; Marc Bellavance
Subject: Under Review - D4092, D4093, D4153, D4074 and D4131

Hi everyone,

D4092, D4093, D4453, D4074 and D4131 drawings are now under review per attached form.

Thanks,
Roberto